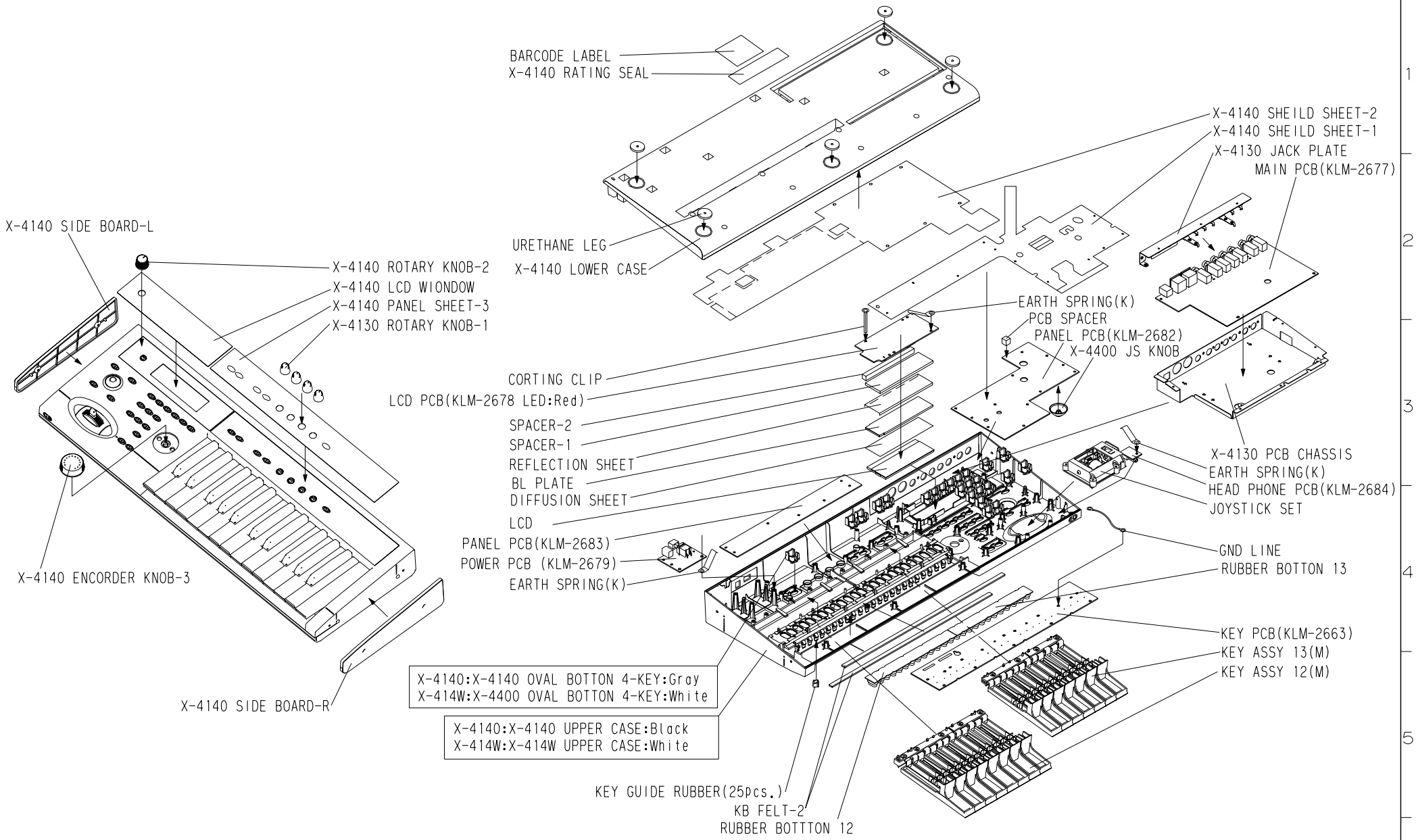

REVISAL MARK	REVISAL REASON	REVISAL DATE	REVISED BY	APPROVED
△				
△				
△				
△				
△				

記号	規 格	使用数
	ねじ指示表	

DRAWN	CHECKED	APPROVED	MODEL	X-4140(microX)/X-414W(MicroXWH)
T.Shimakawa 2006.3.31		Takeda 2006.3.31	TITLE	X-4140/414W ASSEMBLY DRAWING
KORG	KORG INC.		DRAWING No.	KOE-F32150

A3